kawaroa park squash club

Mens Division 5

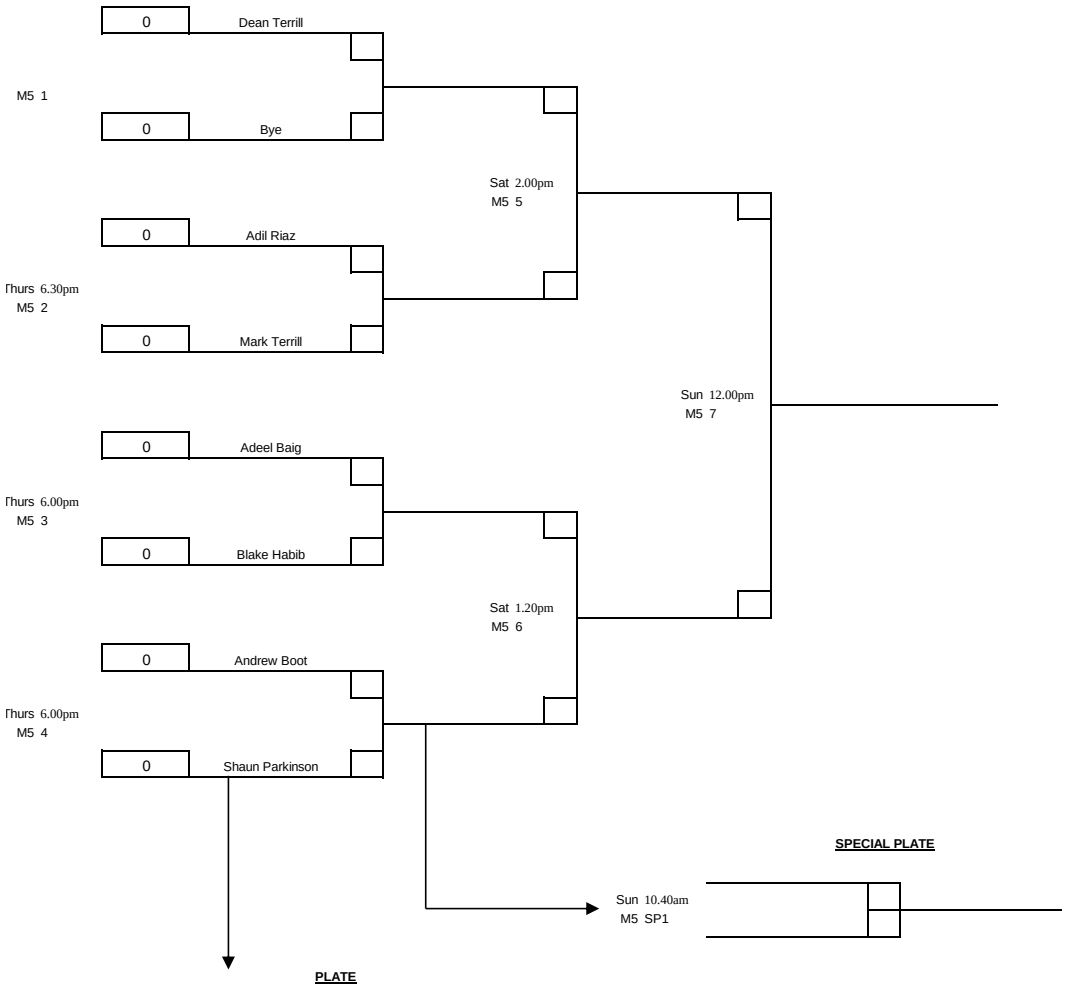

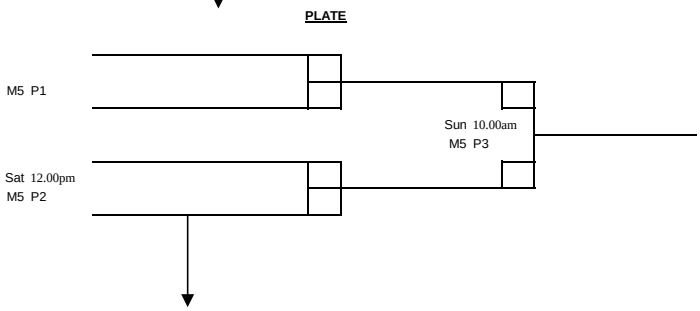

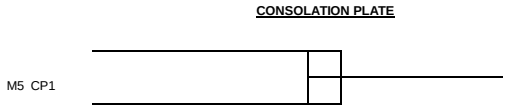

bnz